PortableSDR Keychain

Designed by Michael R Colton

Uses elements of the Maple Mini by Leaf Labs: http://leaflabs.com/about-maple
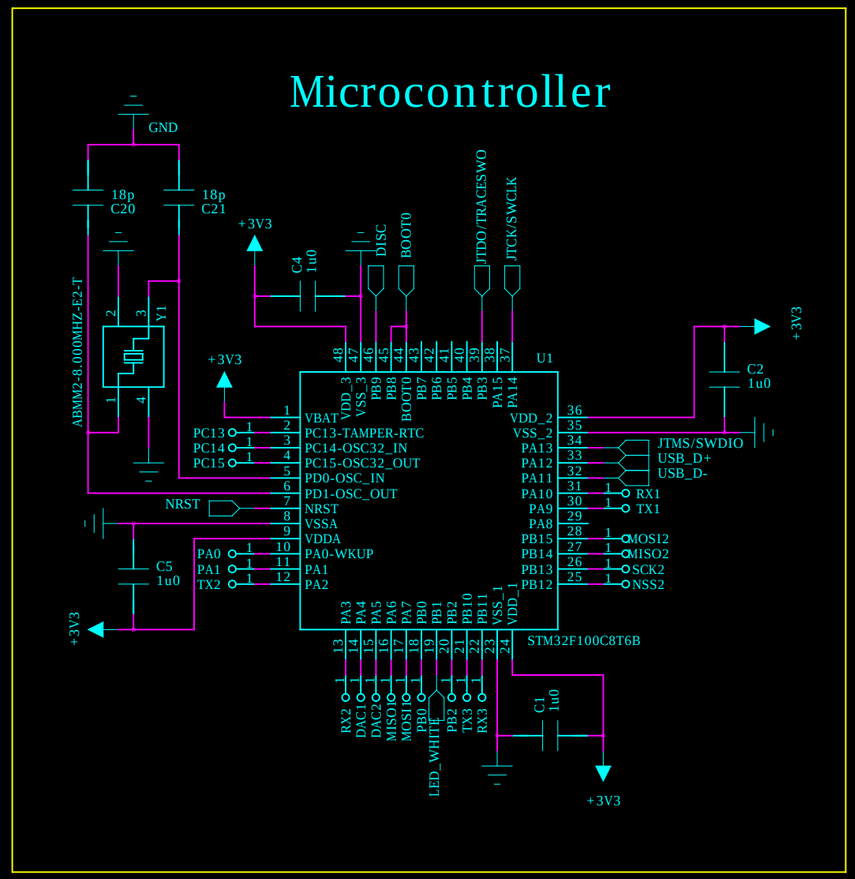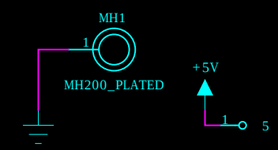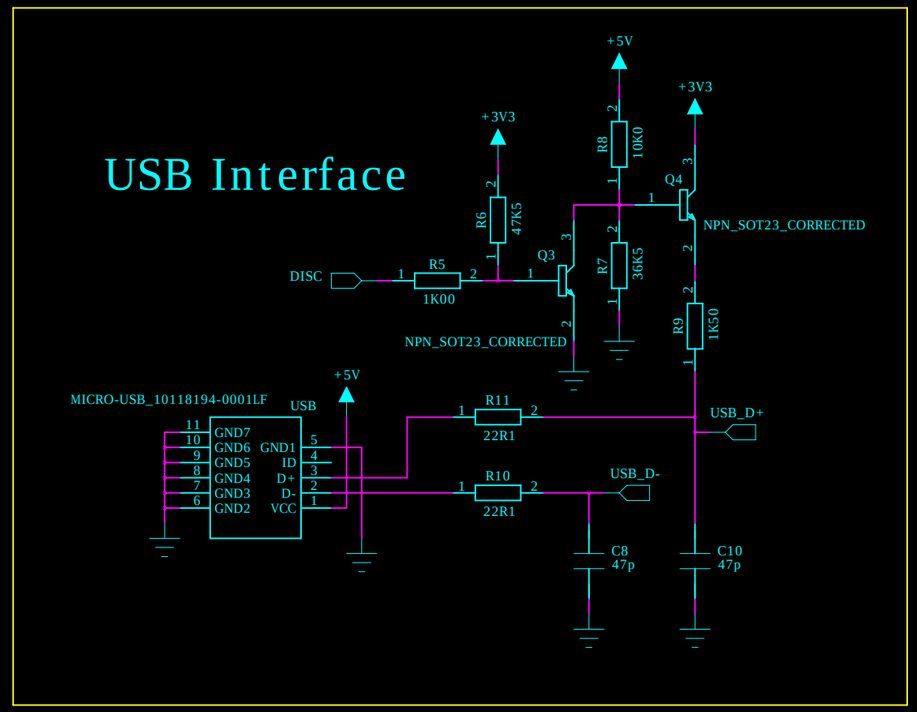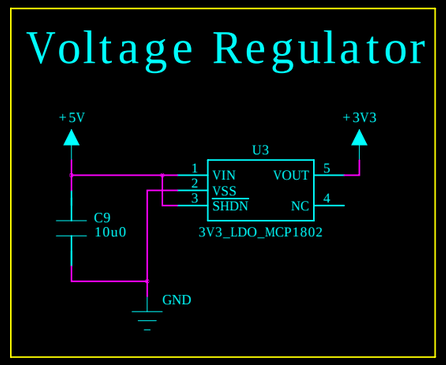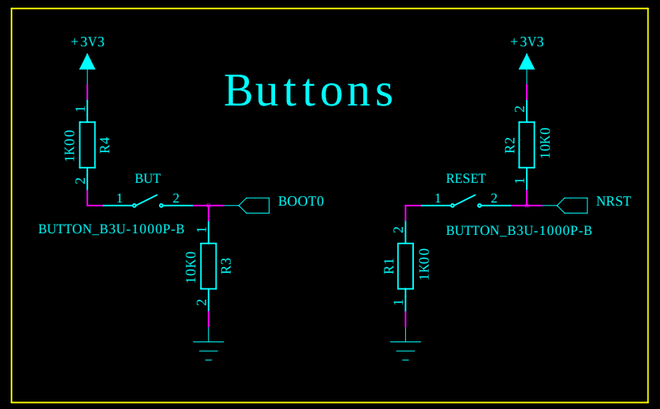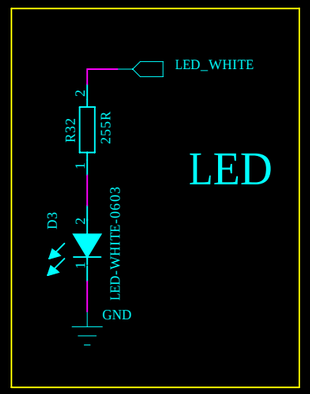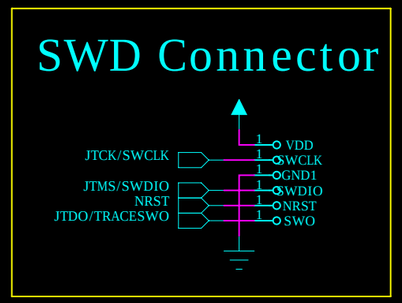
For more information, please visit PortableSDR.com or github.com/MichaelRColton/PSDR